1	FRONT SHEET
2	24V PSU BOARD AE4151 (REGULATED & UNREGULATED)
3	BECKHOFF MODULES - DIGI INPUTS / OUTPUTS
4	BECKHOFF MODULES - DIGI OUTPUTS
5	BECKHOFF MODULES - DIGI OUTPUTS / ANL INPUTS
6	BECKHOFF MODULES - DIGI OUTPUTS (24VDC UNREG.)
7	BECKHOFF MODULES - DIGI OUTPUTS (110VAC)
8	BECKHOFF MODULES - DIGI OUTPUTS
9	CAMERA CONTROL CARD AE0024/110VAC NEUTRAL DIST.
10	FACEPLATE INTERFACE BOARD AF1440
11	FACEPLATE INTERFACE BOARD AF1441
12	FOCAL FIBRE OPTIC INTERFACE RACK
13	LIM, LAMPS 9,10,11, 12 SUPPLY & CWDM CONNS.
14	FACEPLATE CONNECTORS - POD POWER & LAMP DIMMER
15	FACEPLATE CONNECTORS - PORTS 1-8 CAMERAS
16	FACEPLATE CONNECTORS - PORTS 9-17
17	FACEPLATE CONNECTORS - PORTS 18-24
18	FACEPLATE CONNECTORS - PORTS 27-31

NOTES:

1. WIRE Nos. ALLOCATED TO THIS DRG. BEGIN WITH 01.
2. CABLE Nos. ALLOCATED TO THIS DRAWING ARE 1 TO 700. LAST CABLE No. USED 700.
3. UNUSED WIRE Nos. ARE 39, 51, 53, 55 TO 57, 59 TO 61, 63 TO 65, 68 TO 73, 76 TO 81, 84 TO 89, 92 TO 97, 100 TO 105, 108 TO 111, 116, 119 TO 121, 126 TO 129, 134, 137, 139 TO 141, 143, 145, 147, 158, 160 TO 165, 168 TO 170, 174 TO 180, 198, 199, 228 TO 299, 307 TO 599, 629 TO 669.
4. PAIR CABLE Nos. USED ON THIS DRG. ARE P1 - P27
5. COAX CABLE Nos. USED ON THIS DRG. ARE X1 TO X8.
6. FIBRE CABLE Nos USED ON THIS DRG. ARE F1, F3, F1-1 TO F1-8.
7. WIRE Nos OTHER THAN ABOVE ARE DERIVED FROM OTHER SHEETS.
8. ALL CABLES TO BE IN ACCORDANCE WITH SMD DRG. No. PD0739 ISSUE 7.
9. LAST FUSE No. USED F16. LAST RELAY No. USED K5.
10. FUSE TYPE IS DENOTED BY THE FOLLOWING REFERENCES :-
    S - AC SELF-RESETTING FUSE (AB7907-2.2A. FUSE + AA9039-7A. FUSE + PB6471 - HOLDER).
    R - SELF-RESETTING FUSE (PB6471 - HOLDER).
    A - AUTOMOBILE FUSE (PK3834 - 20A. FUSE + PK3777 - HOLDER).
11. LIM UNIT (SHT. 12) TO BE SET-UP AS FOLLOWS :-

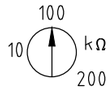

WITH FAULT MEMORY
ALARM RELAY IN N.E. (NORMALLY ENERGISED) MODE.

12. ALL WIRING TO BE FITTED READY TO TAKE OPTIONAL CARDS

REV No	DATE	CHANGE	ZONE	DRAWN	CHECKED	APPROVED

TITLE

DRAWING Q CORE POD WIRING
(FRONT SHEET)

DESIGNED	DRAWN	CHECKED	APPROVED	DATE	DRAWING NO.	REV No.
PDW	PC	KS	IMP	21-MAY-13	AH2742	0
					SHEET 1 OF 18	

ALL INTELLECTUAL PROPERTY RIGHTS SUBSISTING IN THESE DESIGNS ARE THE PROPERTY OF SOIL MACHINE DYNAMICS LTD. NO COPY IS TO BE MADE WITHOUT THE WRITTEN PERMISSION OF SOIL MACHINE DYNAMICS LTD. ANY PATENT APPLICATIONS, PATENTS AND/OR DESIGN APPLICATIONS, REGISTERED DESIGNS, DESIGN RIGHTS OR COPYRIGHT ARISING FROM OR CONTAINED IN THE DESIGNS ARE THE PROPERTY OF SOIL MACHINE DYNAMICS LTD AND ALL INFORMATION MUST BE HELD IN THE STRICTEST CONFIDENCE

SMD Soil Machine Dynamics Ltd

A3

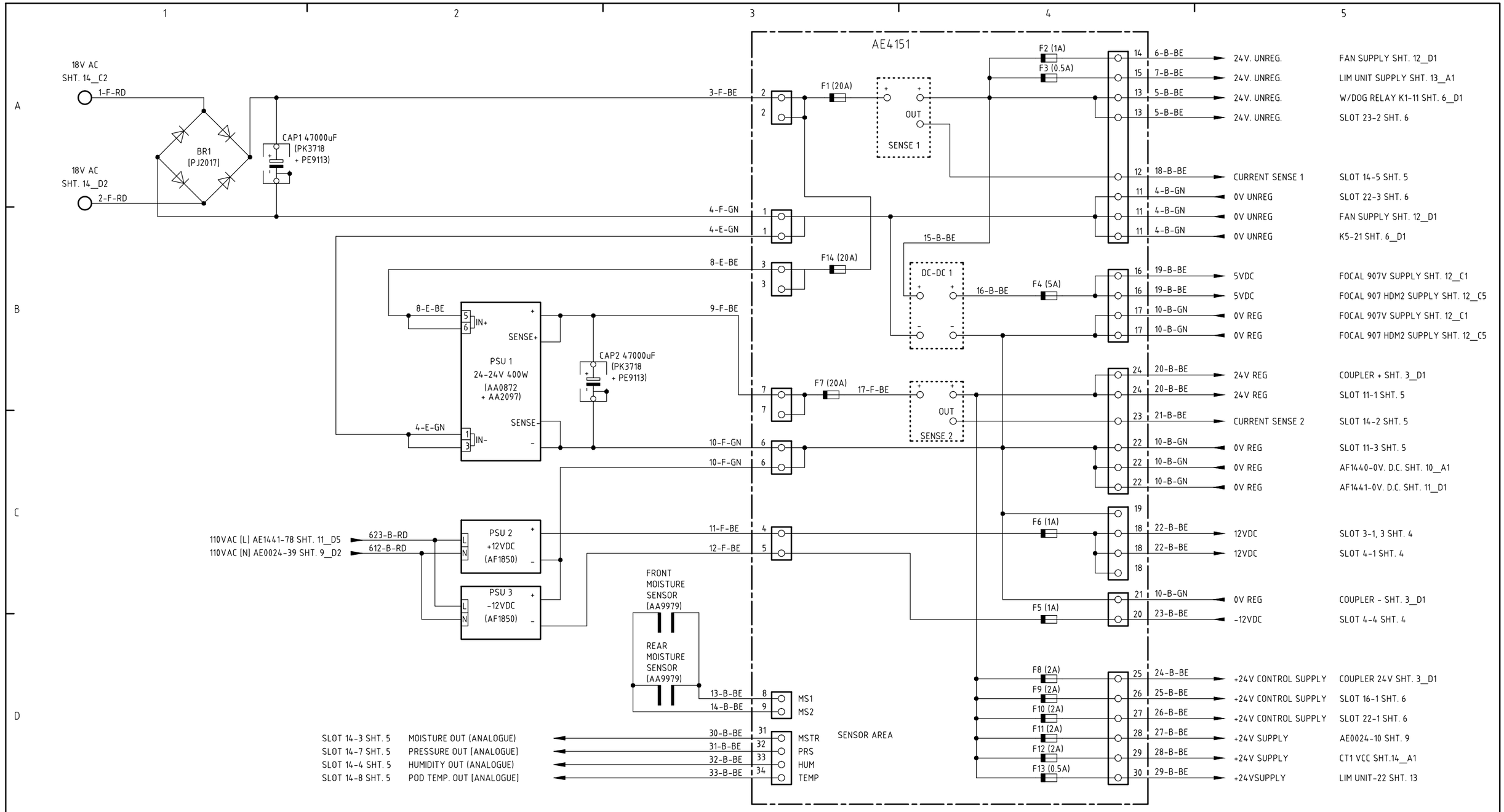

REV No	DATE	CHANGE	ZONE	DRAWN	CHECKED	APPROVED

TITLE

DRAWING Q CORE POD WIRING (24V. PSU BOARD AE4151 [REGULATED & UNREGULATED])

DESIGNED	DRAWN	CHECKED	APPROVED	DATE	DRAWING NO.	REV No.
PDW	PC	KS	IMP	21-MAY-13	AH2742	0
					SHEET 2 OF 18	

ALL INTELLECTUAL PROPERTY RIGHTS SUBSISTING IN THESE DESIGNS ARE THE PROPERTY OF SOIL MACHINE DYNAMICS LTD. NO COPY IS TO BE MADE WITHOUT THE WRITTEN PERMISSION OF SOIL MACHINE DYNAMICS LTD. ANY PATENT APPLICATIONS, PATENTS AND/OR DESIGN APPLICATIONS, REGISTERED DESIGNS, DESIGN RIGHTS OR COPYRIGHT ARISING FROM OR CONTAINED IN THE DESIGNS ARE THE PROPERTY OF SOIL MACHINE DYNAMICS LTD AND ALL INFORMATION MUST BE HELD IN THE STRICTEST CONFIDENCE

SMD **Soil Machine Dynamics Ltd** **A3**

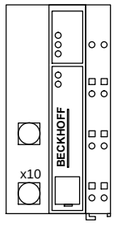

1. RE-ASSEMBLE WITH COUPLER AND BUS END TERMINAL ONLY.
2. SETTINGS ENTERED USING ADDRESS SWITCHES AND POWER CYCLING.
3. POWER OFF; SET X10 = 9 AND X1 = 9, APPLY POWER TO FACTORY DEFAULT THE UNIT.
4. POWER OFF; SET X10 = 3 AND X1 = 2, APPLY POWER TO SET BAUD TO 19200.
5. POWER OFF; SET X10 = 5 AND X1 = 0, APPLY POWER TO SET COUPLER WDOG TO 000MS.
6. POWER OFF; SET X10 = 6 AND X1 = 0, APPLY POWER TO SET COUPLER WDOG TO 0000MS.
7. POWER OFF AND RE-ASSEMBLE.
8. SET X10 = 0 AND X1 = 1 (NODE ID = 01)

DI1	LIM 1 ALARM (110V. A.C.)	DI9	SPARE
DI2	WATCH DOG	DI10	SPARE
DI3	CAM. CONT. TRI-STATE SELECTED	DI11	SPARE
DI4	CAM. CONT. RS485 SELECTED	DI12	SPARE
DI5	P&T CONT. 24V. SELECTED	DI13	SPARE
DI6	P&T CONT. RS485 SELECTED	DI14	SPARE
DI7	CONFIG. 2 SELECTED	DI15	SPARE
DI8	CONFIG. 2 12V. SELECTED	DI16	SPARE

DO1	CAMERA 1 SUPPLY	DO9	ALTIMETER SUPPLY
DO2	CAMERA 2 SUPPLY	DO10	RESPONDER SUPPLY
DO3	CAMERA 3 SUPPLY	DO11	WATCHDOG ENABLE
DO4	CAMERA 4 SUPPLY	DO12	LAMPS 9,10,11 & 12 110V. A.C. SUPPLY
DO5	CAMERA 5 SUPPLY	DO13	CAMERA 5 LED ON/OFF
DO6	CAMERA 6 SUPPLY	DO14	CAMERA 6 LED ON/OFF
DO7	CAMERA 7 (HD) SUPPLY	DO15	RS232 PORT 12 (110V)
DO8	CAMERA 8 (HD) SUPPLY	DO16	WATCHDOG PULSE

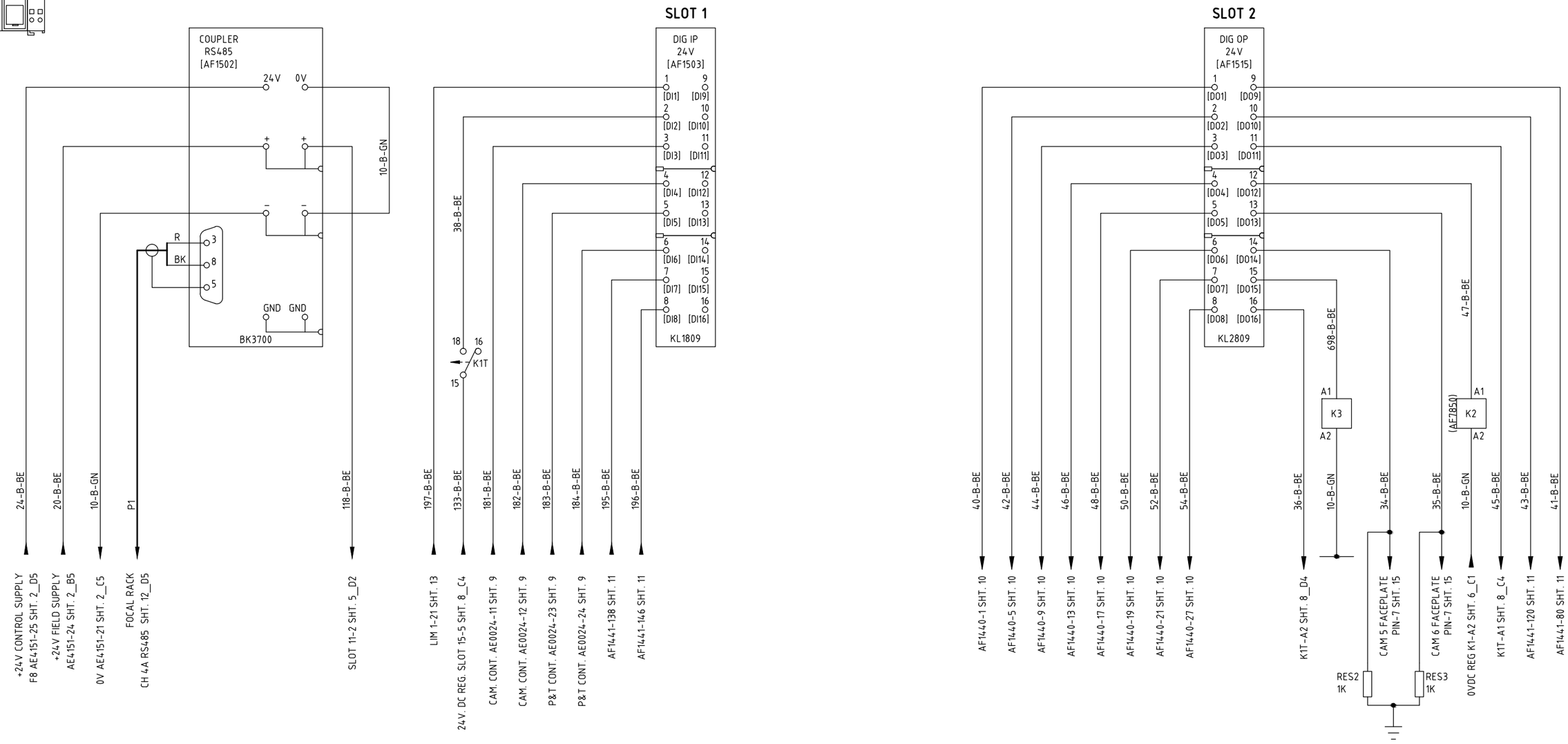

REV No	DATE	CHANGE	ZONE	DRAWN	CHECKED	APPROVED

TITLE

DRAWING Q CORE POD WIRING (BECKHOFF MODULES - DIGI INPUTS / OUTPUTS)

DESIGNED	DRAWN	CHECKED	APPROVED	DATE	DRAWING NO.	REV No.
PDW	PC	KS	IMP	21-MAY-13	AH2742	0
					SHEET 3 OF 18	

ALL INTELLECTUAL PROPERTY RIGHTS SUBSISTING IN THESE DESIGNS ARE THE PROPERTY OF SOIL MACHINE DYNAMICS LTD. NO COPY IS TO BE MADE WITHOUT THE WRITTEN PERMISSION OF SOIL MACHINE DYNAMICS LTD. ANY PATENT APPLICATIONS, PATENTS AND/OR DESIGN APPLICATIONS, REGISTERED DESIGNS, DESIGN RIGHTS OR COPYRIGHT ARISING FROM OR CONTAINED IN THE DESIGNS ARE THE PROPERTY OF SOIL MACHINE DYNAMICS LTD AND ALL INFORMATION MUST BE HELD IN THE STRICTEST CONFIDENCE

SMD Soil Machine Dynamics Ltd

A3

D01	DIGIQUARTZ SUPPLY
D02	SPARE
D03	CONFIG. 2 12V. SUPPLY
D04	SPARE

D01	CAMERA 1 FOCUS +
D02	CAMERA 1 ZOOM +
D03	CAMERA 1 FOCUS -
D04	CAMERA 1 ZOOM -

D01	CAMERA 2 FOCUS +
D02	CAMERA 2 ZOOM +
D03	CAMERA 2 FOCUS -
D04	CAMERA 2 ZOOM -

D01	CAMERA 3 FOCUS +
D02	CAMERA 3 ZOOM+
D03	CAMERA 3 FOCUS -
D04	CAMERA 3 ZOOM -

D01	CAMERA 4 FOCUS +
D02	CAMERA 4 ZOOM+
D03	CAMERA 4 FOCUS -
D04	CAMERA 4 ZOOM -

D01	CAMERA 7 FOCUS +
D02	CAMERA 7 ZOOM+
D03	CAMERA 7 FOCUS -
D04	CAMERA 7 ZOOM -

D01	CAMERA 8 FOCUS +
D02	CAMERA 8 ZOOM+
D03	CAMERA 8 FOCUS -
D04	CAMERA 8 ZOOM -

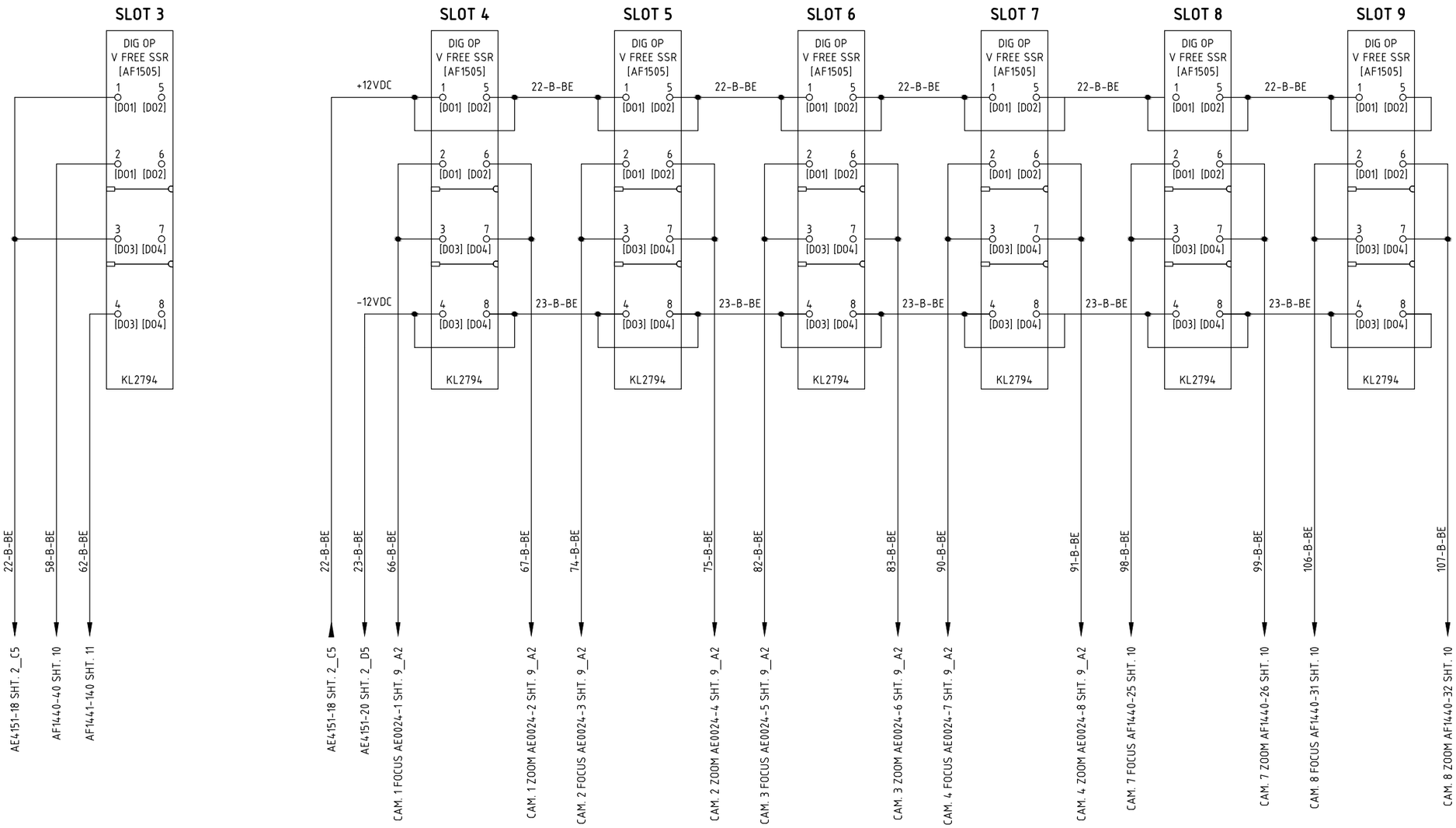

REV No	DATE	CHANGE	ZONE	DRAWN	CHECKED	APPROVED

TITLE

DRAWING Q CORE POD WIRING (BECKHOFF MODULES - DIGI OUTPUTS)

DESIGNED	DRAWN	CHECKED	APPROVED	DATE	DRAWING NO.	REV No.
PDW	PC	KS	IMP	21-MAY-13	AH2742	0
					SHEET 4 OF 18	

ALL INTELLECTUAL PROPERTY RIGHTS SUBSISTING IN THESE DESIGNS ARE THE PROPERTY OF SOIL MACHINE DYNAMICS LTD. NO COPY IS TO BE MADE WITHOUT THE WRITTEN PERMISSION OF SOIL MACHINE DYNAMICS LTD. ANY PATENT APPLICATIONS, PATENTS AND/OR DESIGN APPLICATIONS, REGISTERED DESIGNS, DESIGN RIGHTS OR COPYRIGHT ARISING FROM OR CONTAINED IN THE DESIGNS ARE THE PROPERTY OF SOIL MACHINE DYNAMICS LTD AND ALL INFORMATION MUST BE HELD IN THE STRICTEST CONFIDENCE

SMD Soil Machine Dynamics Ltd

A3

1 2 3 4 5

DO1 RS232 PORT 9 SUPPLY
DO2 RS232 PORT 11 SUPPLY
DO3 RS232 PORT 12 SUPPLY
DO4 CONFIG. 1 PORT 23 SUPPLY

DO1 RS232 PORT 20 SUPPLY
DO2 RS232 PORT 21 SUPPLY
DO3 RS232 PORT 22 SUPPLY
DO4 CONFIG. 2 PORT 24 SUPPLY

AI1 CP PROBE 1
AI2 CP PROBE 2

AI1 ALTIMETER SIGNAL
AI2 CURRENT SENSE 1 24V. D.C. UNREG.
AI3 CURRENT SENSE 2 24V. D.C. REG.
AI4 CURRENT SENSE 3 110V. A.C.
AI5 POD MOISTURE
AI6 POD PRESSURE
AI7 POD HUMIDITY
AI8 POD TEMPERATURE

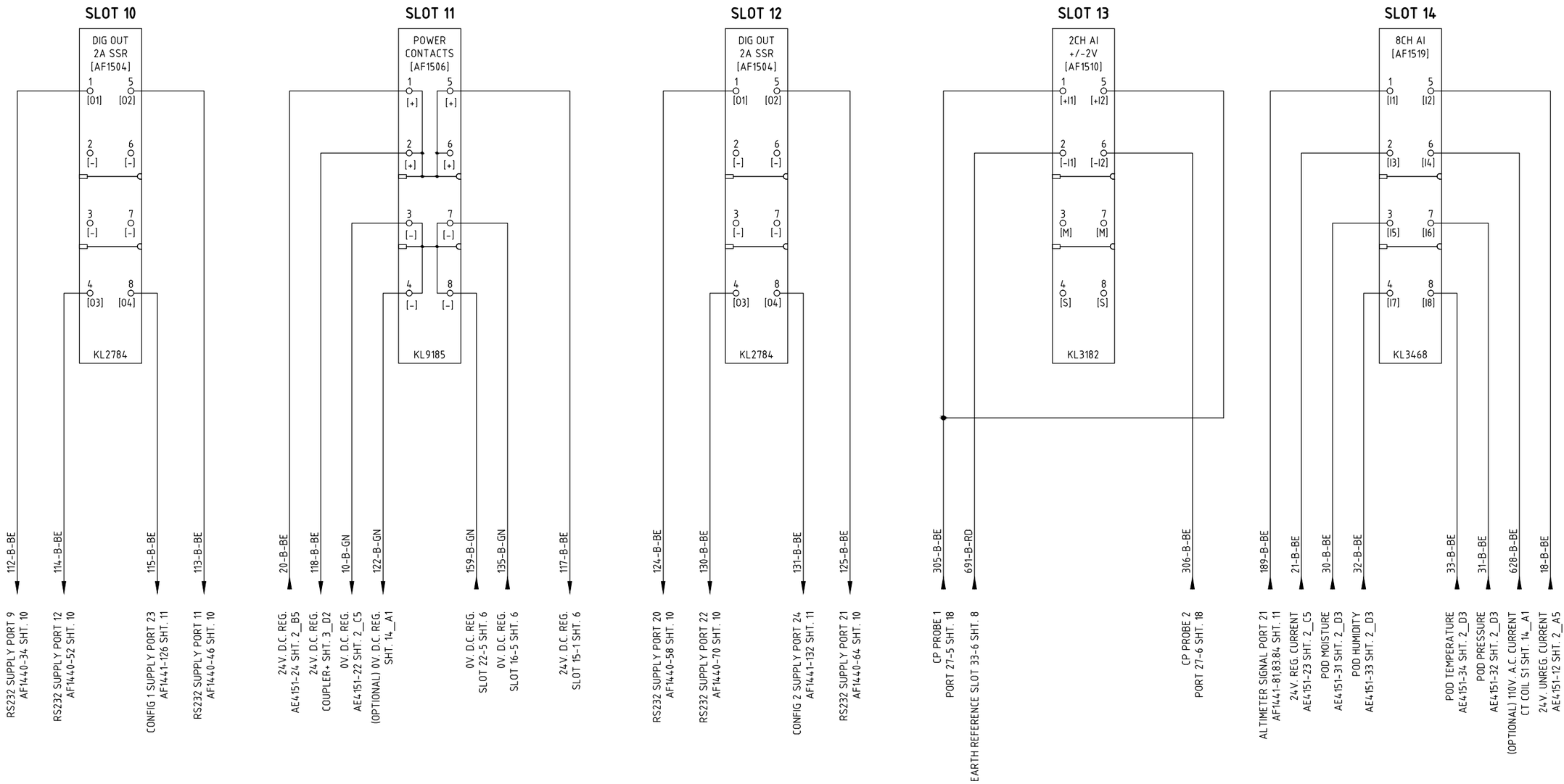

REV No	DATE	CHANGE	ZONE	DRAWN	CHECKED	APPROVED

TITLE

DRAWING Q CORE POD WIRING (BECKHOFF MODULES - DIGI OUTPUTS / ANL INPUTS)

DESIGNED	DRAWN	CHECKED	APPROVED	DATE	DRAWING NO.	REV No.
PDW	PC	KS	IMP	21-MAY-13	AH2742	0
					SHEET 5 OF 18	

ALL INTELLECTUAL PROPERTY RIGHTS SUBSISTING IN THESE DESIGNS ARE THE PROPERTY OF SOIL MACHINE DYNAMICS LTD. NO COPY IS TO BE MADE WITHOUT THE WRITTEN PERMISSION OF SOIL MACHINE DYNAMICS LTD. ANY PATENT APPLICATIONS, PATENTS AND/OR DESIGN APPLICATIONS, REGISTERED DESIGNS, DESIGN RIGHTS OR COPYRIGHT ARISING FROM OR CONTAINED IN THE DESIGNS ARE THE PROPERTY OF SOIL MACHINE DYNAMICS LTD AND ALL INFORMATION MUST BE HELD IN THE STRICTEST CONFIDENCE

SMD Soil Machine Dynamics Ltd

A3

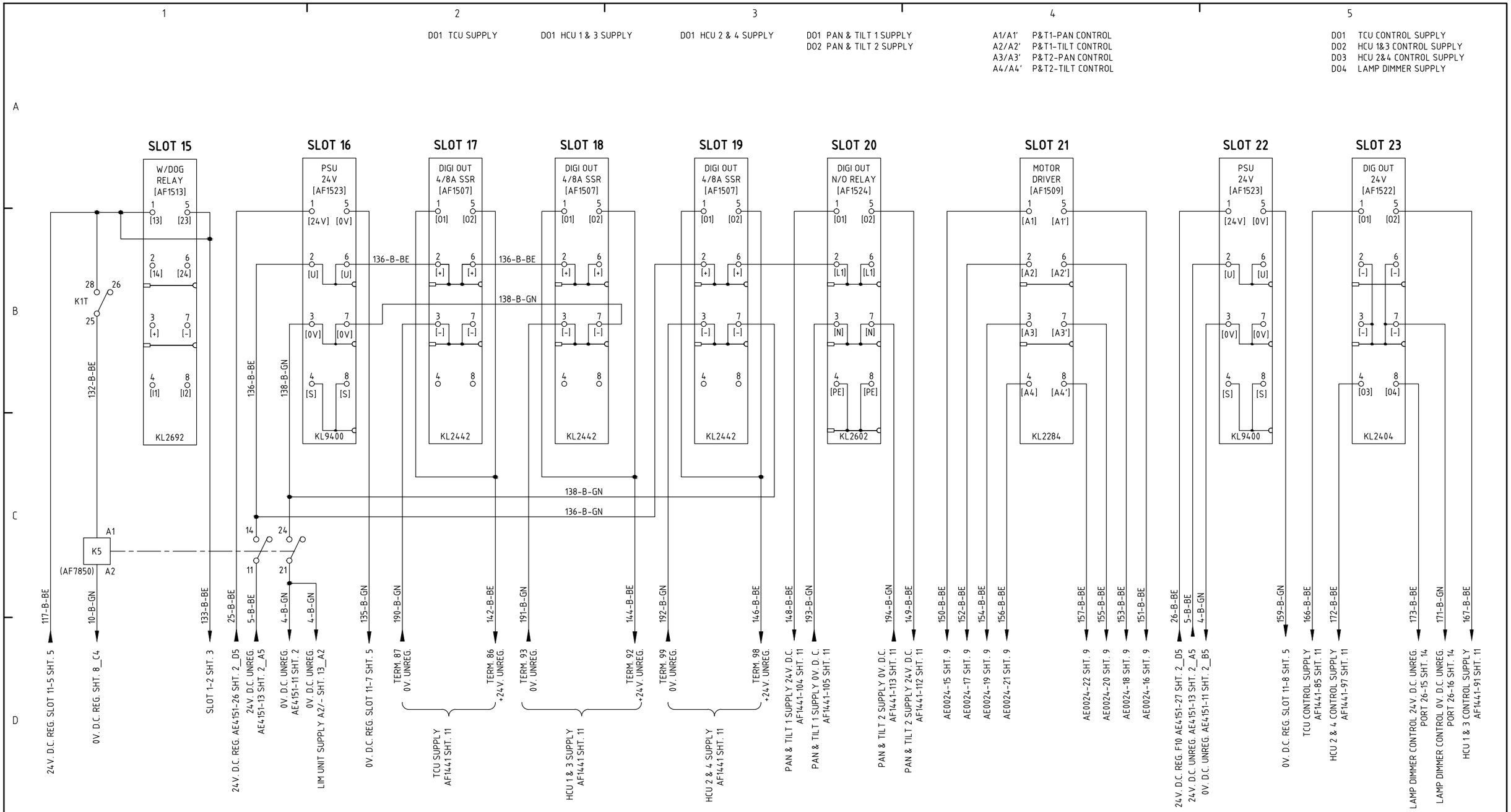

REV No	DATE	CHANGE	ZONE	DRAWN	CHECKED	APPROVED

TITLE

DRAWING Q CORE POD WIRING (BECKHOFF MODULES - DIGI OUTPUTS [24V DC UNREG.])

DESIGNED	DRAWN	CHECKED	APPROVED	DATE	DRAWING NO.	REV No.
PDW	PC	KS	IMP	21-MAY-13	AH2742	0
					SHEET 6 OF 18	

ALL INTELLECTUAL PROPERTY RIGHTS SUBSISTING IN THESE DESIGNS ARE THE PROPERTY OF SOIL MACHINE DYNAMICS LTD. NO COPY IS TO BE MADE WITHOUT THE WRITTEN PERMISSION OF SOIL MACHINE DYNAMICS LTD. ANY PATENT APPLICATIONS, PATENTS AND/OR DESIGN APPLICATIONS, REGISTERED DESIGNS, DESIGN RIGHTS OR COPYRIGHT ARISING FROM OR CONTAINED IN THE DESIGNS ARE THE PROPERTY OF SOIL MACHINE DYNAMICS LTD AND ALL INFORMATION MUST BE HELD IN THE STRICTEST CONFIDENCE

SMD Soil Machine Dynamics Ltd

A3

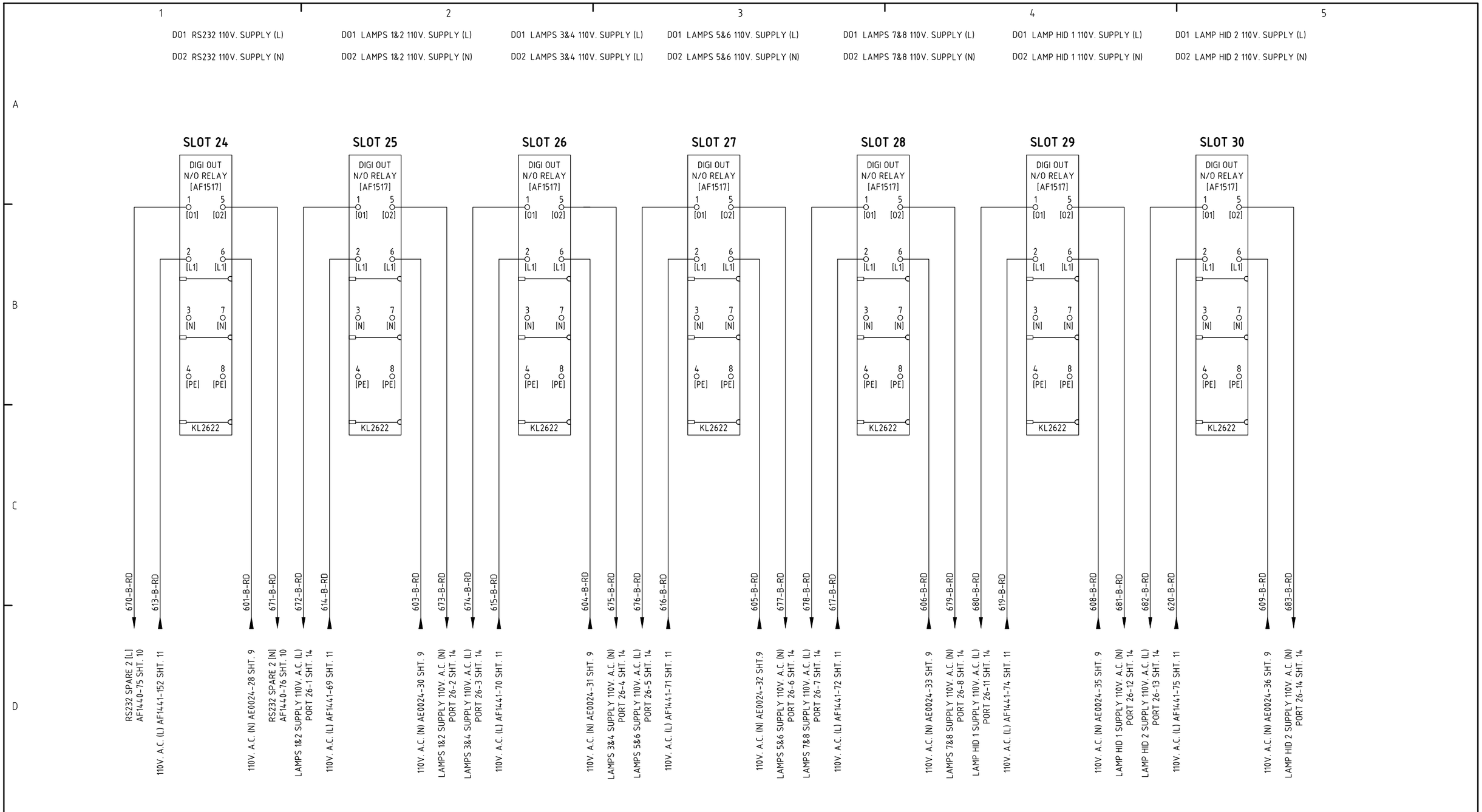

REV No	DATE	CHANGE	ZONE	DRAWN	CHECKED	APPROVED

TITLE

DRAWING Q CORE POD WIRING
BECKHOFF MODULES - DIGI OUTPUTS [110V AC])

DESIGNED	DRAWN	CHECKED	APPROVED	DATE	DRAWING NO.	REV No.
PDW	PC	KS	IMP	21-MAY-13	AH2742	0
					SHEET 7 OF 18	

ALL INTELLECTUAL PROPERTY RIGHTS SUBSISTING IN THESE DESIGNS ARE THE PROPERTY OF SOIL MACHINE DYNAMICS LTD. NO COPY IS TO BE MADE WITHOUT THE WRITTEN PERMISSION OF SOIL MACHINE DYNAMICS LTD. ANY PATENT APPLICATIONS, PATENTS AND/OR DESIGN APPLICATIONS, REGISTERED DESIGNS, DESIGN RIGHTS OR COPYRIGHT ARISING FROM OR CONTAINED IN THE DESIGNS ARE THE PROPERTY OF SOIL MACHINE DYNAMICS LTD AND ALL INFORMATION MUST BE HELD IN THE STRICTEST CONFIDENCE

SMD Soil Machine Dynamics Ltd

A3

DO1 SURVEY POD 1 110V. SUPPLY (L)
DO2 SURVEY POD 1 110V. SUPPLY (N)

DO1 SURVEY POD 2 110V. SUPPLY (L)
DO2 SURVEY POD 2 110V. SUPPLY (N)

DO1 LIM RESET
DO2 CP PROBE EARTH REFERENCE

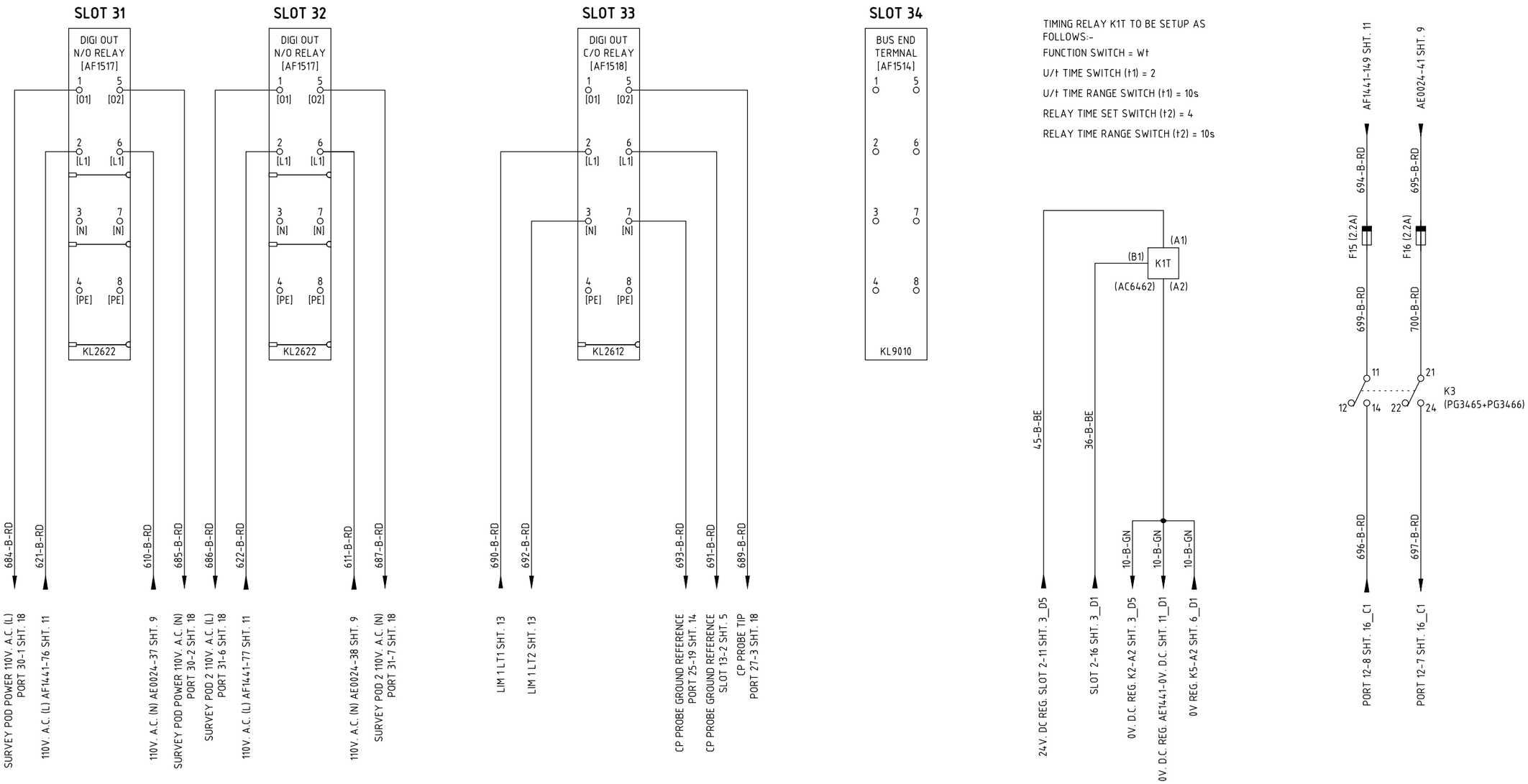

REV No	DATE	CHANGE	ZONE	DRAWN	CHECKED	APPROVED

TITLE

DRAWING Q CORE POD WIRING (BECKHOFF MODULES - DIGI OUTPUTS)

DESIGNED	DRAWN	CHECKED	APPROVED	DATE	DRAWING NO.	REV No.
PDW	PC	KS	IMP	21-MAY-13	AH2742	0
					SHEET 8 OF 18	

ALL INTELLECTUAL PROPERTY RIGHTS SUBSISTING IN THESE DESIGNS ARE THE PROPERTY OF SOIL MACHINE DYNAMICS LTD. NO COPY IS TO BE MADE WITHOUT THE WRITTEN PERMISSION OF SOIL MACHINE DYNAMICS LTD. ANY PATENT APPLICATIONS, PATENTS AND/OR DESIGN APPLICATIONS, REGISTERED DESIGNS, DESIGN RIGHTS OR COPYRIGHT ARISING FROM OR CONTAINED IN THE DESIGNS ARE THE PROPERTY OF SOIL MACHINE DYNAMICS LTD AND ALL INFORMATION MUST BE HELD IN THE STRICTEST CONFIDENCE

SMD Soil Machine Dynamics Ltd

A3

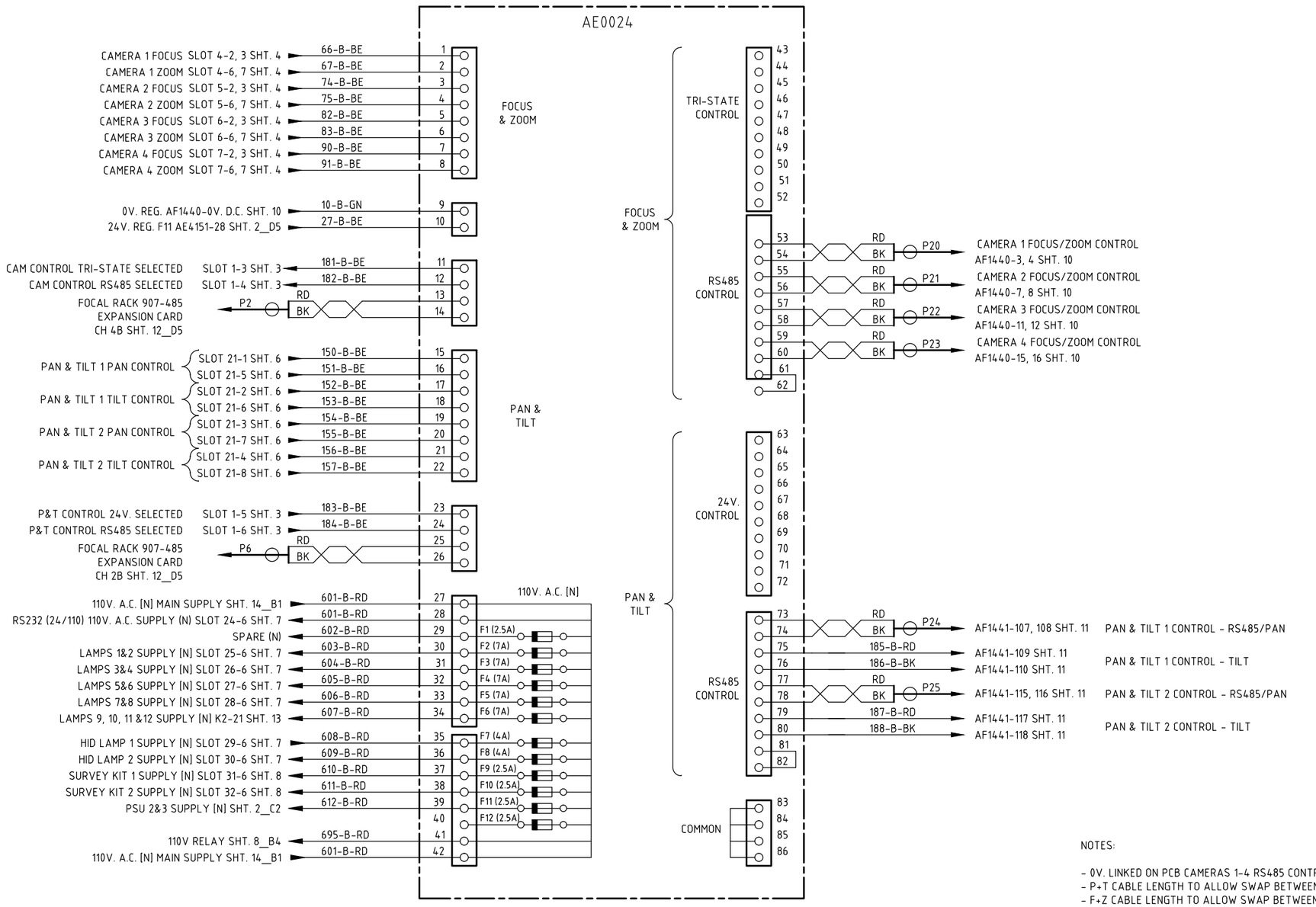

NOTES:

- 0V. LINKED ON PCB CAMERAS 1-4 RS485 CONTROL MULTI-DROPPED ON PCB.
- P+T CABLE LENGTH TO ALLOW SWAP BETWEEN RS485 AND 24V HEADERS
- F+Z CABLE LENGTH TO ALLOW SWAP BETWEEN RS485 AND TRISTATE HEADERS
- HDR1 AND HDR2 JUMPERS TO BE FITTED IF 120R TERMINATION RESISTOR REQUIRED

REV No	DATE	CHANGE	ZONE	DRAWN	CHECKED	APPROVED

TITLE

DRAWING Q CORE POD WIRING (CAMERA CONTROL CARD AE0024/110VAC NEUTRAL DIST.)

DESIGNED	DRAWN	CHECKED	APPROVED	DATE	DRAWING NO.	REV No.
PDW	PC	KS	IMP	21-MAY-13	AH2742	0
					SHEET 9 OF 18	

ALL INTELLECTUAL PROPERTY RIGHTS SUBSISTING IN THESE DESIGNS ARE THE PROPERTY OF SOIL MACHINE DYNAMICS LTD. NO COPY IS TO BE MADE WITHOUT THE WRITTEN PERMISSION OF SOIL MACHINE DYNAMICS LTD. ANY PATENT APPLICATIONS, PATENTS AND/OR DESIGN APPLICATIONS, REGISTERED DESIGNS, DESIGN RIGHTS OR COPYRIGHT ARISING FROM OR CONTAINED IN THE DESIGNS ARE THE PROPERTY OF SOIL MACHINE DYNAMICS LTD AND ALL INFORMATION MUST BE HELD IN THE STRICTEST CONFIDENCE

SMD Soil Machine Dynamics Ltd

A3

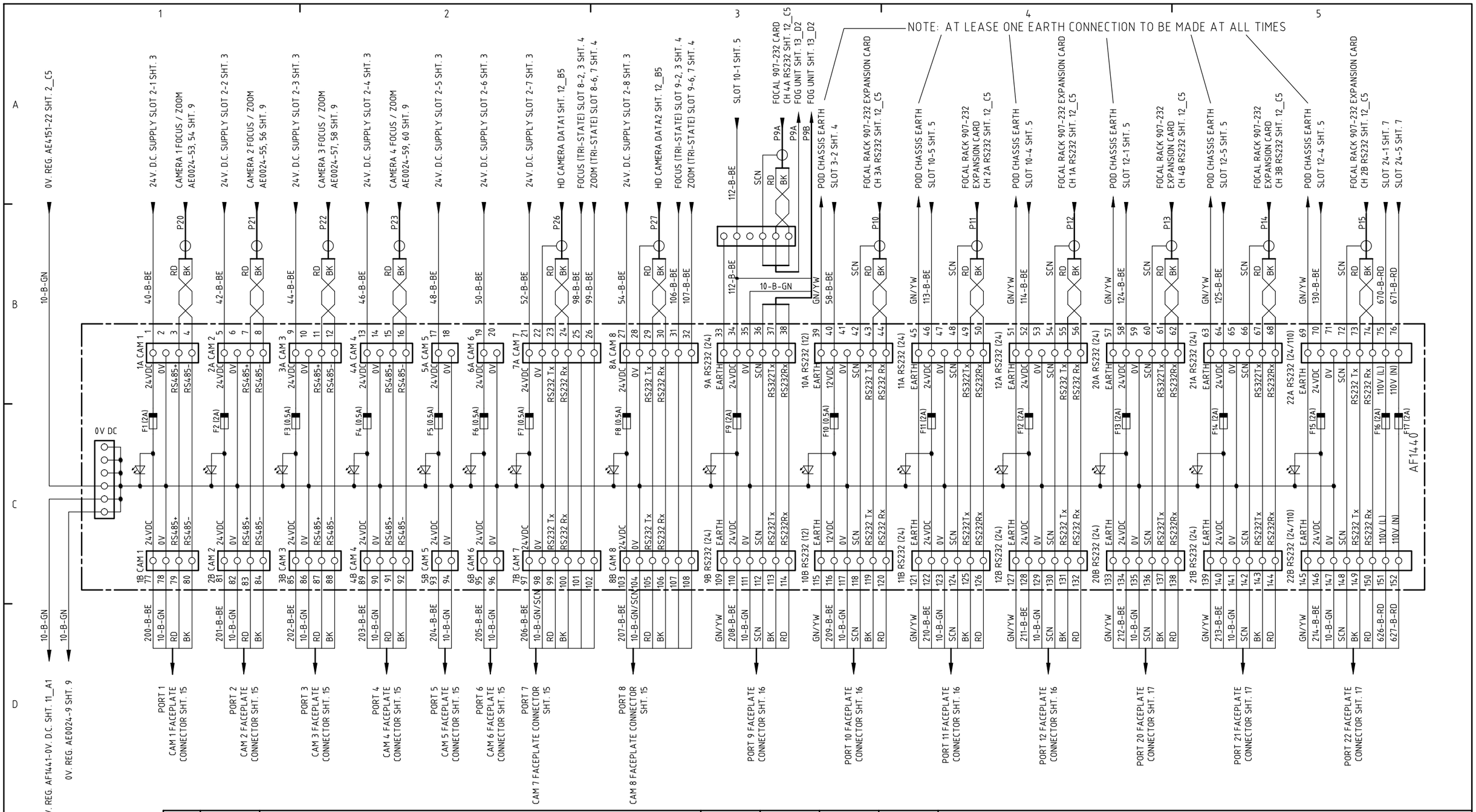

NOTES:

- ALL 0V LINKED ON PCB
- ALL EARTHS LINKED ON PCB
- HDR1 AND HDR2 JUMPERS TO BE FITTED IF 120R TERMINATION RESISTOR REQUIRED

REV No	DATE	CHANGE	ZONE	DRAWN	CHECKED	APPROVED

TITLE

DRAWING Q CORE POD WIRING (FACEPLATE INTERFACE BOARD AF1440)

DESIGNED	DRAWN	CHECKED	APPROVED	DATE	DRAWING NO.	REV No.
PDW	PC	KS	IMP	21-MAY-13	AH2742	0
					SHEET 10 OF 18	

ALL INTELLECTUAL PROPERTY RIGHTS SUBSISTING IN THESE DESIGNS ARE THE PROPERTY OF SOIL MACHINE DYNAMICS LTD. NO COPY IS TO BE MADE WITHOUT THE WRITTEN PERMISSION OF SOIL MACHINE DYNAMICS LTD. ANY PATENT APPLICATIONS, PATENTS AND/OR DESIGN APPLICATIONS, REGISTERED DESIGNS, DESIGN RIGHTS OR COPYRIGHT ARISING FROM OR CONTAINED IN THE DESIGNS ARE THE PROPERTY OF SOIL MACHINE DYNAMICS LTD AND ALL INFORMATION MUST BE HELD IN THE STRICTEST CONFIDENCE

SMD Soil Machine Dynamics Ltd

A3

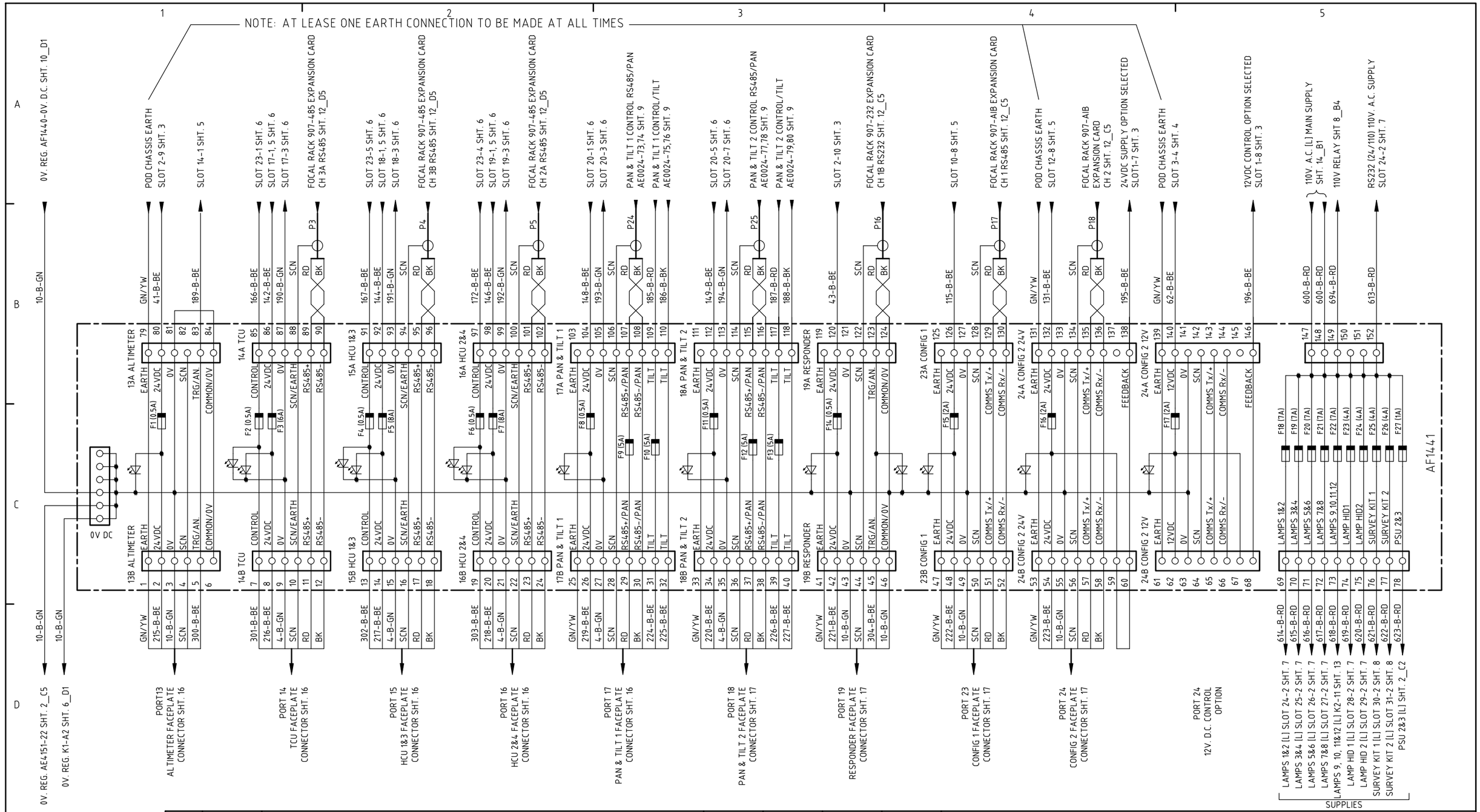

NOTES:

- 0V LINKED ON PCB
- EARTHS LINKED ON PCB
- CONFIG 2 PORTS RS485 LINKED ON PCB

REV No	DATE	CHANGE	ZONE	DRAWN	CHECKED	APPROVED

TITLE

DRAWING Q CORE POD WIRING (FACEPLATE INTERFACE BOARD AF1441)

DESIGNED	DRAWN	CHECKED	APPROVED	DATE	DRAWING NO.	REV No.
PDW	PC	KS	IMP	21-MAY-13	AH2742	0
					SHEET 11 OF 18	

ALL INTELLECTUAL PROPERTY RIGHTS SUBSISTING IN THESE DESIGNS ARE THE PROPERTY OF SOIL MACHINE DYNAMICS LTD. NO COPY IS TO BE MADE WITHOUT THE WRITTEN PERMISSION OF SOIL MACHINE DYNAMICS LTD. ANY PATENT APPLICATIONS, PATENTS AND/OR DESIGN APPLICATIONS, REGISTERED DESIGNS, DESIGN RIGHTS OR COPYRIGHT ARISING FROM OR CONTAINED IN THE DESIGNS ARE THE PROPERTY OF SOIL MACHINE DYNAMICS LTD AND ALL INFORMATION MUST BE HELD IN THE STRICTEST CONFIDENCE

SMD Soil Machine Dynamics Ltd

A3

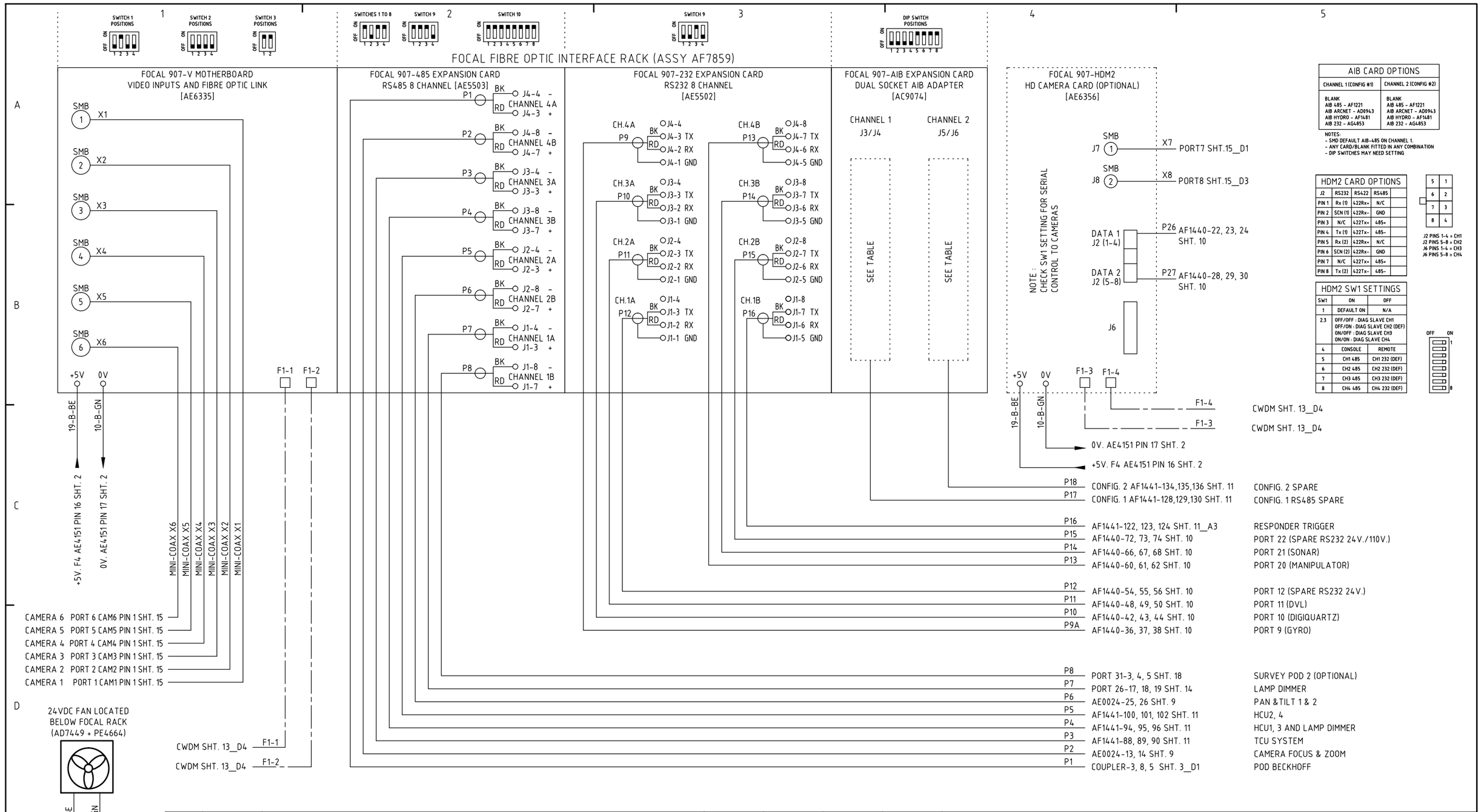

AIB CARD OPTIONS	
CHANNEL 1 (CONFIG #1)	CHANNEL 2 (CONFIG #2)
BLANK AIB 485 - AF1221 AIB ARCNET - AD0943 AIB HYDRO - AF1481 AIB 232 - AG4853	BLANK AIB 485 - AF1221 AIB ARCNET - AD0943 AIB HYDRO - AF1481 AIB 232 - AG4853

NOTES:
- SMD DEFAULT AIB-485 ON CHANNEL 1.
- ANY CARD/BLANK FITTED IN ANY COMBINATION
- DIP SWITCHES MAY NEED SETTING

HDM2 CARD OPTIONS			
J2	RS232	RS422	RS485
PIN 1	Rx (1)	422Rx+	N/C
PIN 2	SCN (1)	422Rx-	GND
PIN 3	N/C	422Tx+	485+
PIN 4	Tx (1)	422Tx-	485-
PIN 5	Rx (2)	422Rx+	N/C
PIN 6	SCN (2)	422Rx-	GND
PIN 7	N/C	422Tx+	485+
PIN 8	Tx (2)	422Tx-	485-

5	1
6	2
7	3
8	4

J2 PINS 1-4 = CH1
J2 PINS 5-8 = CH2
J6 PINS 1-4 = CH3
J6 PINS 5-8 = CH4

HDM2 SW1 SETTINGS		
SW1	ON	OFF
1	DEFAULT ON	N/A
2,3	OFF/OFF : DIAG SLAVE CH1 OFF/ON : DIAG SLAVE CH2 (DEF) ON/OFF : DIAG SLAVE CH3 ON/ON : DIAG SLAVE CH4	
4	CONSOLE	REMOTE
5	CH1 485	CH1 232 (DEF)
6	CH2 485	CH2 232 (DEF)
7	CH3 485	CH3 232 (DEF)
8	CH4 485	CH4 232 (DEF)

OFF ON 1 8

REV No	DATE	CHANGE	ZONE	DRAWN	CHECKED	APPROVED

TITLE

DRAWING Q CORE POD WIRING (FOCAL FIBRE OPTIC INTERFACE RACK)

DESIGNED	DRAWN	CHECKED	APPROVED	DATE	DRAWING NO.	REV No.
PDW	PC	KS	IMP	21-MAY-13	AH2742	0
					SHEET 12 OF 18	

ALL INTELLECTUAL PROPERTY RIGHTS SUBSISTING IN THESE DESIGNS ARE THE PROPERTY OF SOIL MACHINE DYNAMICS LTD. NO COPY IS TO BE MADE WITHOUT THE WRITTEN PERMISSION OF SOIL MACHINE DYNAMICS LTD. ANY PATENT APPLICATIONS, PATENTS AND/OR DESIGN APPLICATIONS, REGISTERED DESIGNS, DESIGN RIGHTS OR COPYRIGHT ARISING FROM OR CONTAINED IN THE DESIGNS ARE THE PROPERTY OF SOIL MACHINE DYNAMICS LTD AND ALL INFORMATION MUST BE HELD IN THE STRICTEST CONFIDENCE

SMD Soil Machine Dynamics Ltd

A3

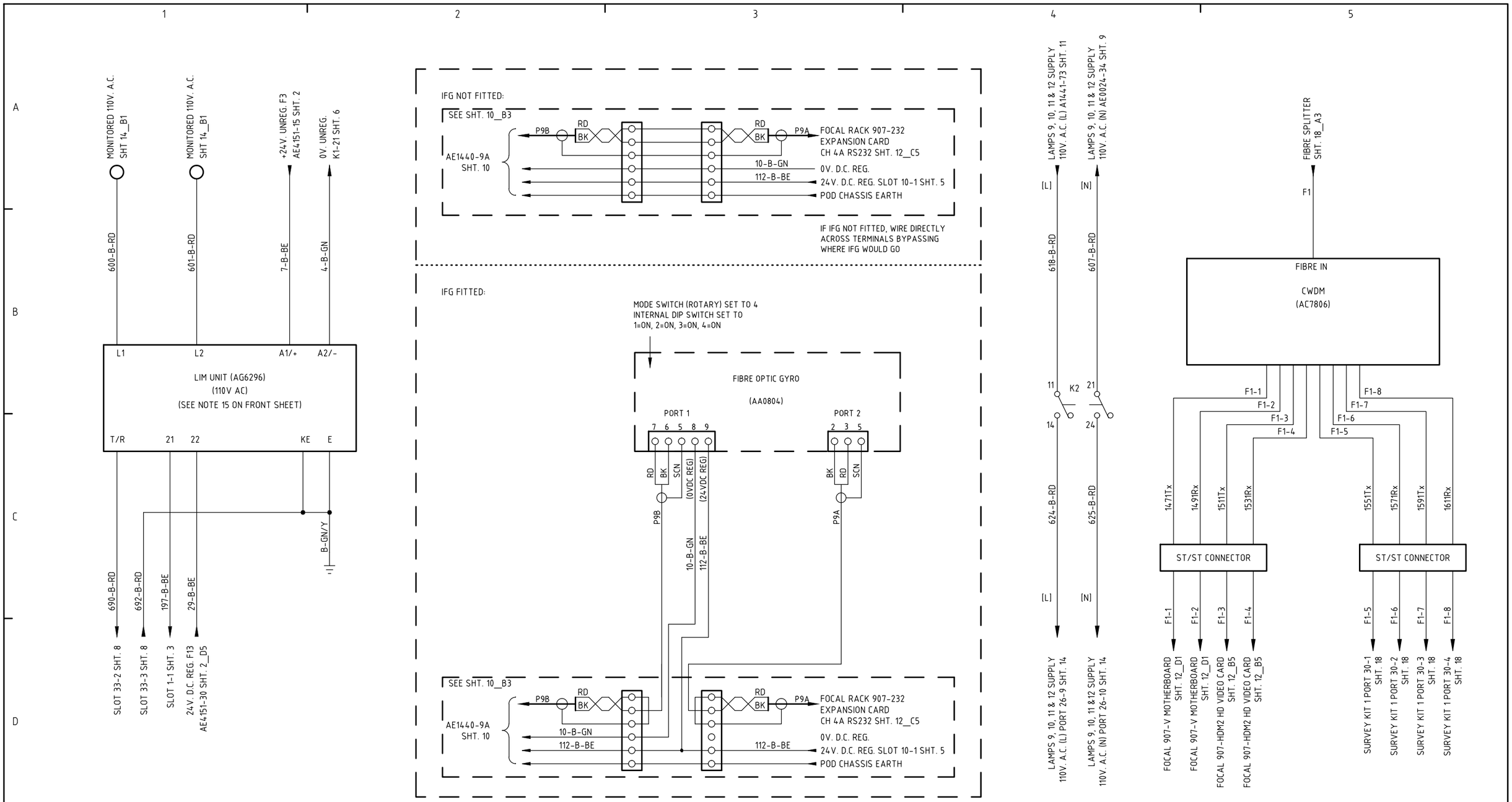

REV No	DATE	CHANGE	ZONE	DRAWN	CHECKED	APPROVED

TITLE

DRAWING Q CORE POD WIRING (LIM, LAMPS 9,10,11,12 SUPPLY & CWDM CONNS.)

DESIGNED	DRAWN	CHECKED	APPROVED	DATE	DRAWING NO.	REV No.
PDW	PC	KS	IMP	21-MAY-13	AH2742	0
					SHEET 13 OF 18	

ALL INTELLECTUAL PROPERTY RIGHTS SUBSISTING IN THESE DESIGNS ARE THE PROPERTY OF SOIL MACHINE DYNAMICS LTD. NO COPY IS TO BE MADE WITHOUT THE WRITTEN PERMISSION OF SOIL MACHINE DYNAMICS LTD. ANY PATENT APPLICATIONS, PATENTS AND/OR DESIGN APPLICATIONS, REGISTERED DESIGNS, DESIGN RIGHTS OR COPYRIGHT ARISING FROM OR CONTAINED IN THE DESIGNS ARE THE PROPERTY OF SOIL MACHINE DYNAMICS LTD AND ALL INFORMATION MUST BE HELD IN THE STRICTEST CONFIDENCE

SMD Soil Machine Dynamics Ltd

A3

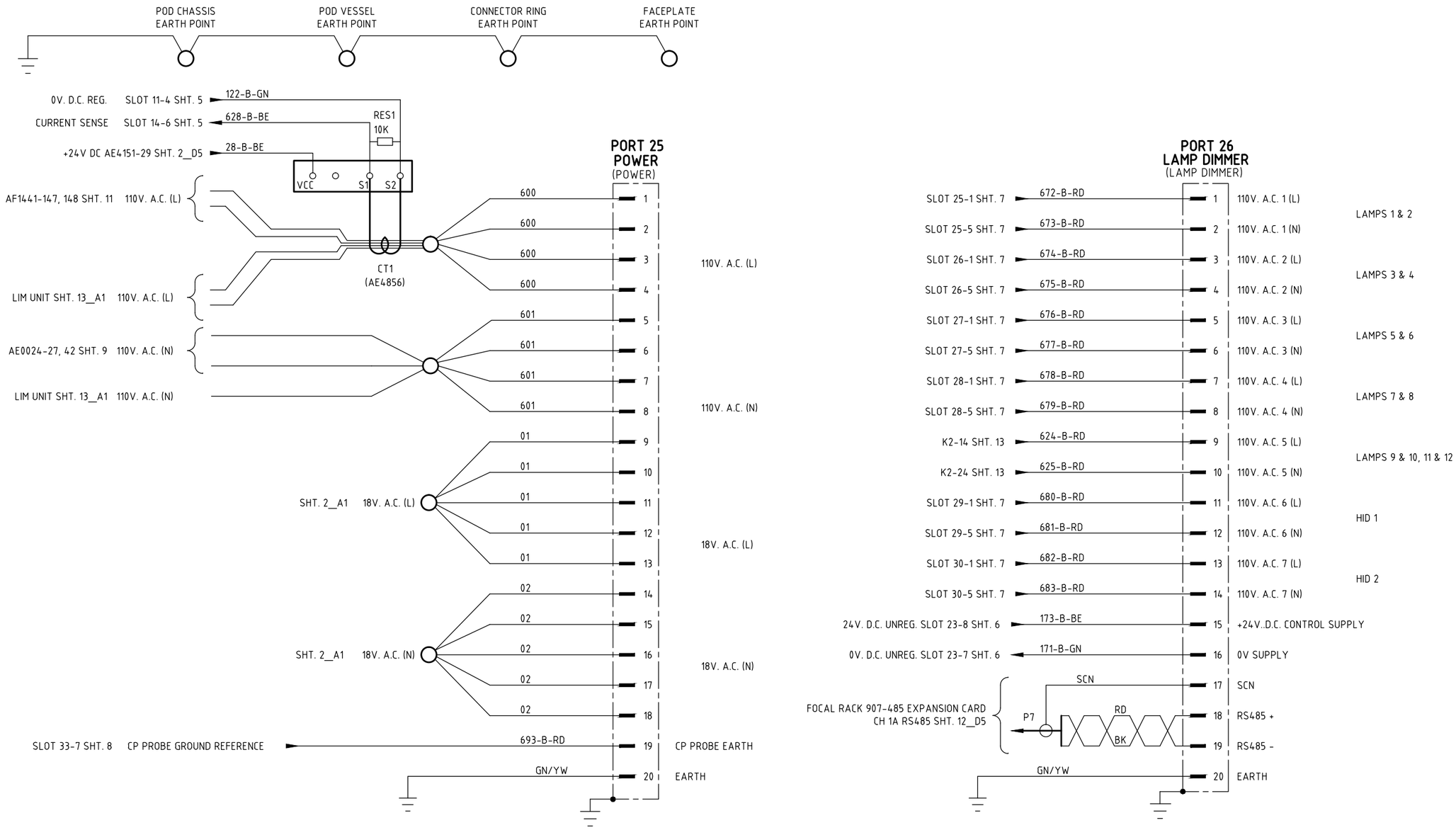

REV No	DATE	CHANGE	ZONE	DRAWN	CHECKED	APPROVED

TITLE

DRAWING Q CORE POD WIRING (FACEPLATE CONNECTORS - POD POWER & LAMP DIMMER)

DESIGNED	DRAWN	CHECKED	APPROVED	DATE	DRAWING NO.	REV No.
PDW	PC	KS	IMP	21-MAY-13	AH2742	0
					SHEET 14 OF 18	

ALL INTELLECTUAL PROPERTY RIGHTS SUBSISTING IN THESE DESIGNS ARE THE PROPERTY OF SOIL MACHINE DYNAMICS LTD. NO COPY IS TO BE MADE WITHOUT THE WRITTEN PERMISSION OF SOIL MACHINE DYNAMICS LTD. ANY PATENT APPLICATIONS, PATENTS AND/OR DESIGN APPLICATIONS, REGISTERED DESIGNS, DESIGN RIGHTS OR COPYRIGHT ARISING FROM OR CONTAINED IN THE DESIGNS ARE THE PROPERTY OF SOIL MACHINE DYNAMICS LTD AND ALL INFORMATION MUST BE HELD IN THE STRICTEST CONFIDENCE

SMD Soil Machine Dynamics Ltd

A3

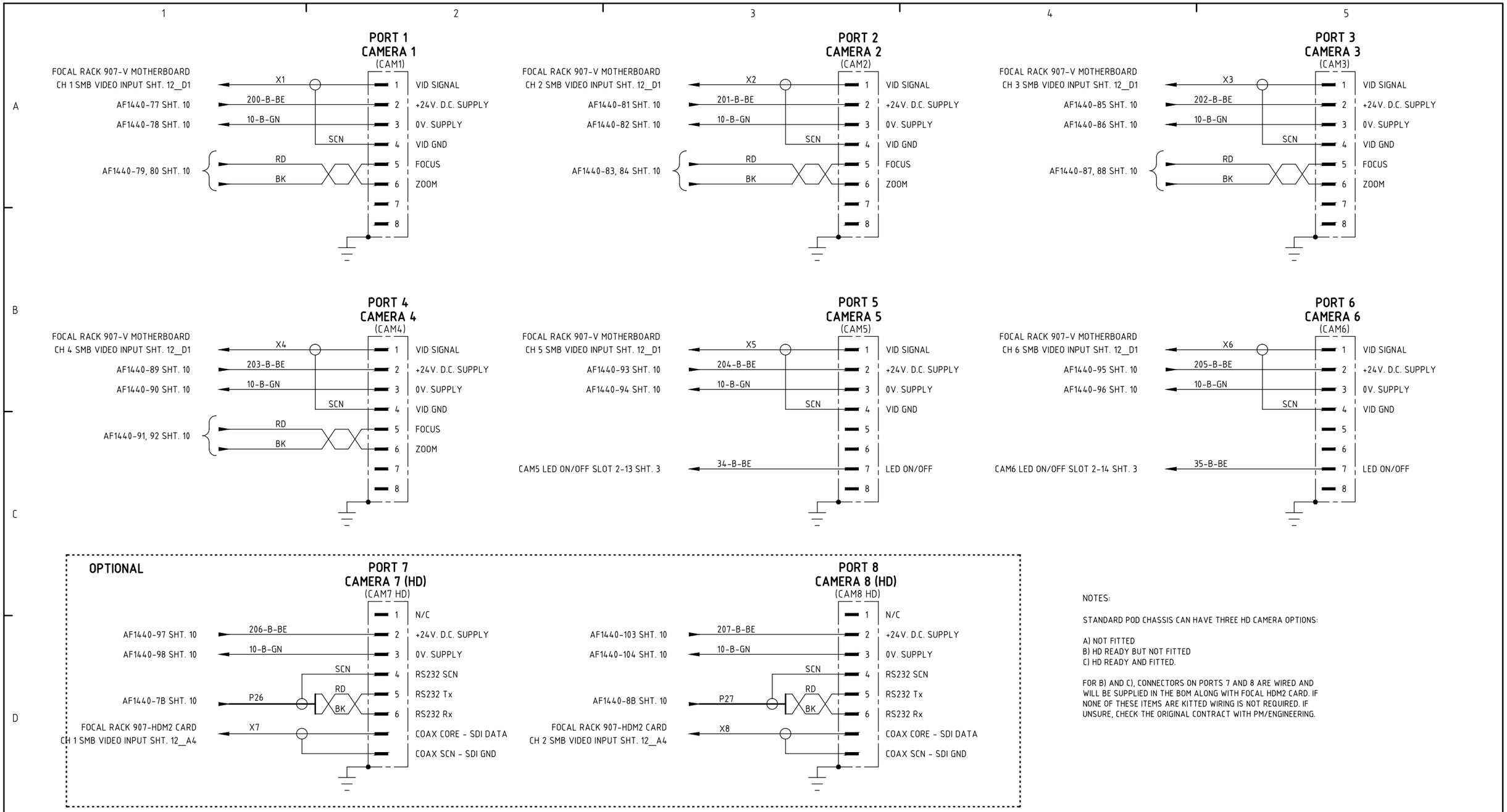

NOTES:

STANDARD POD CHASSIS CAN HAVE THREE HD CAMERA OPTIONS:

A) NOT FITTED
B) HD READY BUT NOT FITTED
C) HD READY AND FITTED.

FOR B) AND C), CONNECTORS ON PORTS 7 AND 8 ARE WIRED AND WILL BE SUPPLIED IN THE BOM ALONG WITH FOCAL HDM2 CARD. IF NONE OF THESE ITEMS ARE KITTED WIRING IS NOT REQUIRED. IF UNSURE, CHECK THE ORIGINAL CONTRACT WITH PM/ENGINEERING.

REV No	DATE	CHANGE	ZONE	DRAWN	CHECKED	APPROVED

TITLE

DRAWING Q CORE POD WIRING
(FACEPLATE CONNECTORS - PORTS 1-8 CAMERAS)

DESIGNED	DRAWN	CHECKED	APPROVED	DATE	DRAWING NO.	REV No.
PDW	PC	KS	IMP	21-MAY-13	AH2742	0
					SHEET 15 OF 18	

ALL INTELLECTUAL PROPERTY RIGHTS SUBSISTING IN THESE DESIGNS ARE THE PROPERTY OF SOIL MACHINE DYNAMICS LTD. NO COPY IS TO BE MADE WITHOUT THE WRITTEN PERMISSION OF SOIL MACHINE DYNAMICS LTD. ANY PATENT APPLICATIONS, PATENTS AND/OR DESIGN APPLICATIONS, REGISTERED DESIGNS, DESIGN RIGHTS OR COPYRIGHT ARISING FROM OR CONTAINED IN THE DESIGNS ARE THE PROPERTY OF SOIL MACHINE DYNAMICS LTD AND ALL INFORMATION MUST BE HELD IN THE STRICTEST CONFIDENCE

SMD Soil Machine Dynamics Ltd

A3

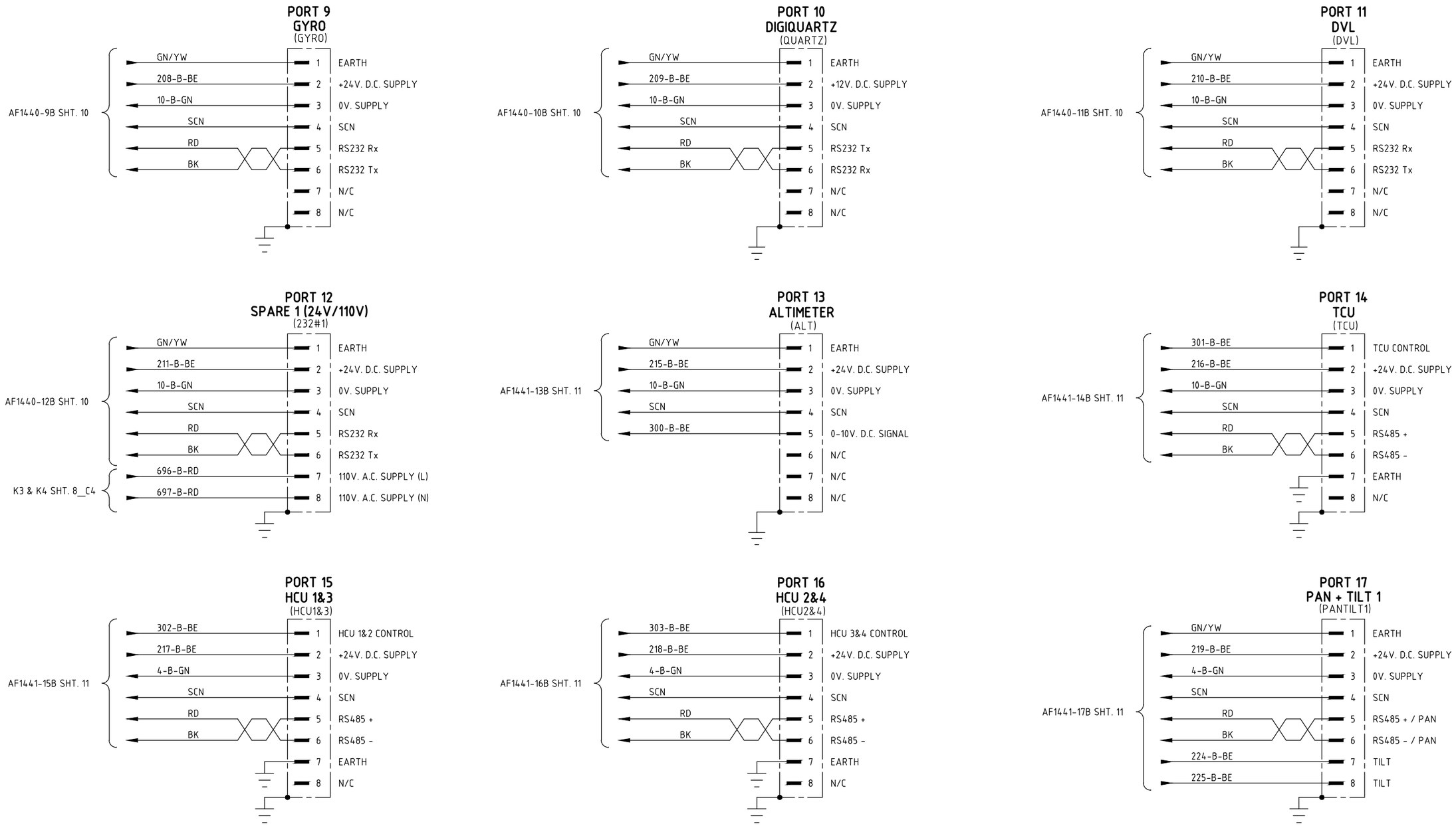

REV No	DATE	CHANGE	ZONE	DRAWN	CHECKED	APPROVED

TITLE

DRAWING Q CORE POD WIRING
(FACEPLATE CONNECTORS - PORTS 9-17)

DESIGNED	DRAWN	CHECKED	APPROVED	DATE	DRAWING NO.	REV No.
PDW	PC	KS	IMP	21-MAY-13	AH2742	0
					SHEET 16 OF 18	

ALL INTELLECTUAL PROPERTY RIGHTS SUBSISTING IN THESE DESIGNS ARE THE PROPERTY OF SOIL MACHINE DYNAMICS LTD. NO COPY IS TO BE MADE WITHOUT THE WRITTEN PERMISSION OF SOIL MACHINE DYNAMICS LTD. ANY PATENT APPLICATIONS, PATENTS AND/OR DESIGN APPLICATIONS, REGISTERED DESIGNS, DESIGN RIGHTS OR COPYRIGHT ARISING FROM OR CONTAINED IN THE DESIGNS ARE THE PROPERTY OF SOIL MACHINE DYNAMICS LTD AND ALL INFORMATION MUST BE HELD IN THE STRICTEST CONFIDENCE

SMD Soil Machine Dynamics Ltd

A3

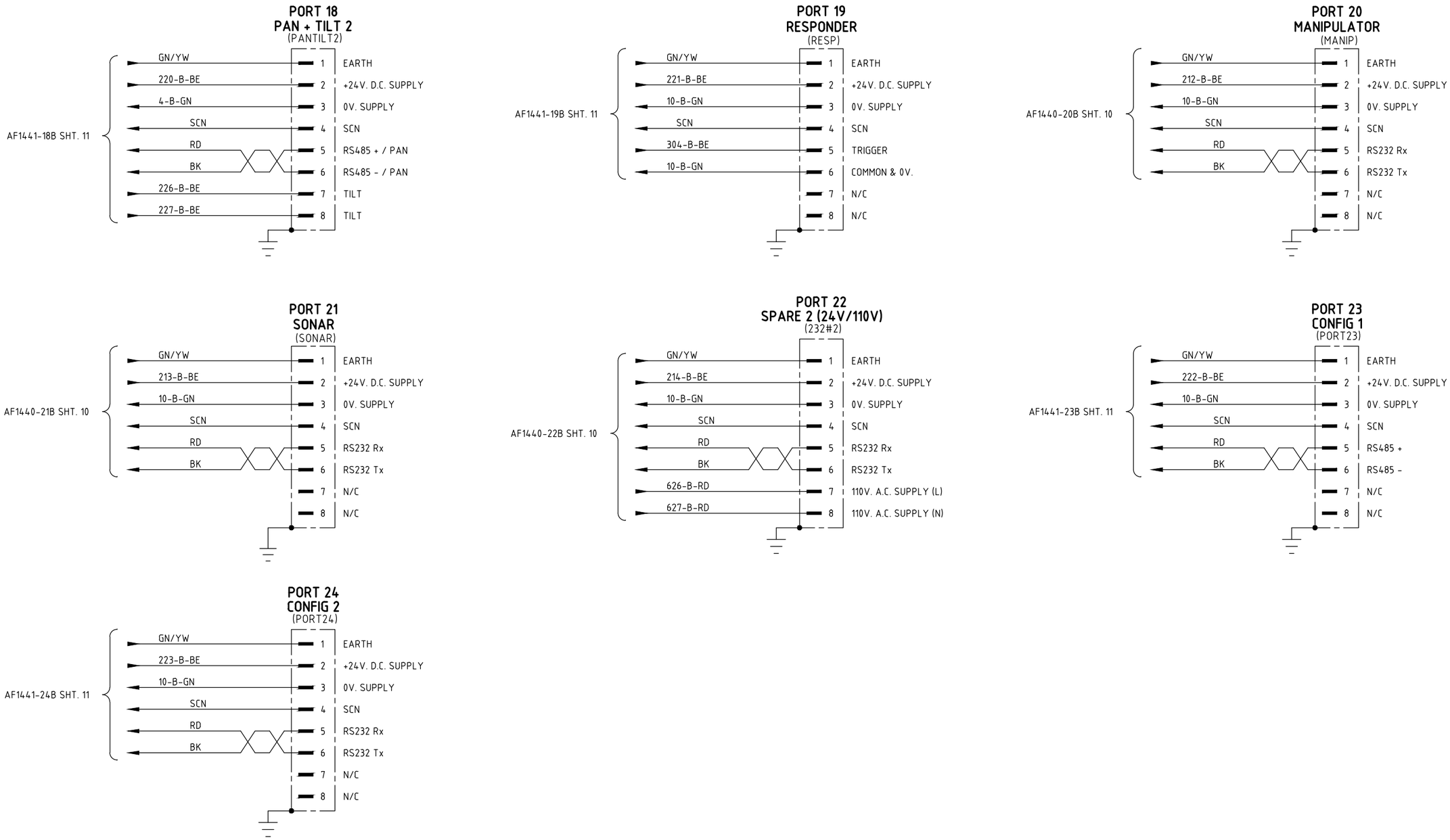

REV No	DATE	CHANGE	ZONE	DRAWN	CHECKED	APPROVED

TITLE

DRAWING Q CORE POD WIRING
(FACEPLATE CONNECTORS - PORTS 18-24)

DESIGNED	DRAWN	CHECKED	APPROVED	DATE	DRAWING NO.	REV No.
PDW	PC	KS	IMP	21-MAY-13	AH2742	0
					SHEET 17 OF 18	

ALL INTELLECTUAL PROPERTY RIGHTS SUBSISTING IN THESE DESIGNS ARE THE PROPERTY OF SOIL MACHINE DYNAMICS LTD. NO COPY IS TO BE MADE WITHOUT THE WRITTEN PERMISSION OF SOIL MACHINE DYNAMICS LTD. ANY PATENT APPLICATIONS, PATENTS AND/OR DESIGN APPLICATIONS, REGISTERED DESIGNS, DESIGN RIGHTS OR COPYRIGHT ARISING FROM OR CONTAINED IN THE DESIGNS ARE THE PROPERTY OF SOIL MACHINE DYNAMICS LTD AND ALL INFORMATION MUST BE HELD IN THE STRICTEST CONFIDENCE

SMD Soil Machine Dynamics Ltd

A3

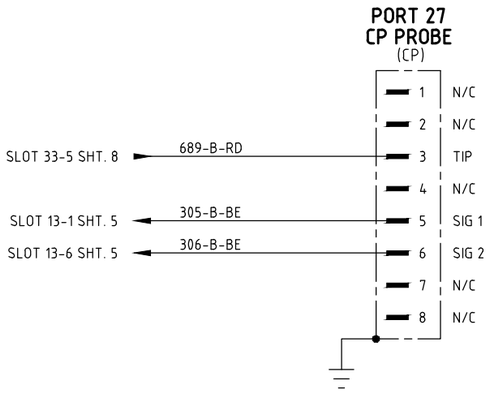

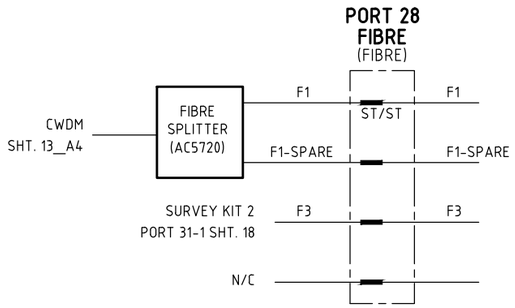

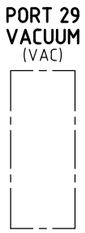

OPTIONAL

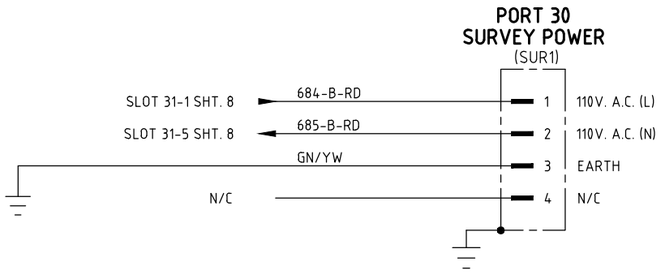

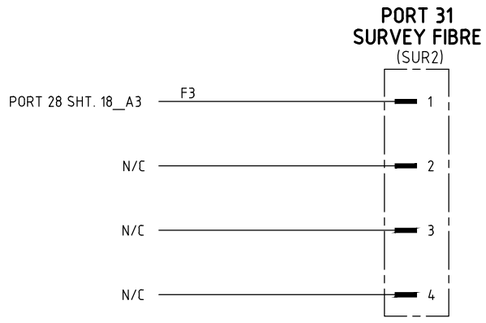

NOTES:

PORTS 30 & 31 ARE OPTIONAL SURVEY KITS EXPANSION PORTS. THESE CONNECTORS ARE FITTED AND WIRED IF KITTED. IF UNSURE, CHECK ORIGINAL CONTRACT WITH PM/ENGINEERING.

REV No	DATE	CHANGE	ZONE	DRAWN	CHECKED	APPROVED

TITLE

DRAWING Q CORE POD WIRING
(FACEPLATE CONNECTORS - PORTS 27-31)

DESIGNED	DRAWN	CHECKED	APPROVED	DATE	DRAWING NO.	REV No.
PDW	PC	KS	IMP	21-MAY-13	AH2742	0
					SHEET 18 OF 18	

ALL INTELLECTUAL PROPERTY RIGHTS SUBSISTING IN THESE DESIGNS ARE THE PROPERTY OF SOIL MACHINE DYNAMICS LTD. NO COPY IS TO BE MADE WITHOUT THE WRITTEN PERMISSION OF SOIL MACHINE DYNAMICS LTD. ANY PATENT APPLICATIONS, PATENTS AND/OR DESIGN APPLICATIONS, REGISTERED DESIGNS, DESIGN RIGHTS OR COPYRIGHT ARISING FROM OR CONTAINED IN THE DESIGNS ARE THE PROPERTY OF SOIL MACHINE DYNAMICS LTD AND ALL INFORMATION MUST BE HELD IN THE STRICTEST CONFIDENCE

SMD Soil Machine Dynamics Ltd

A3